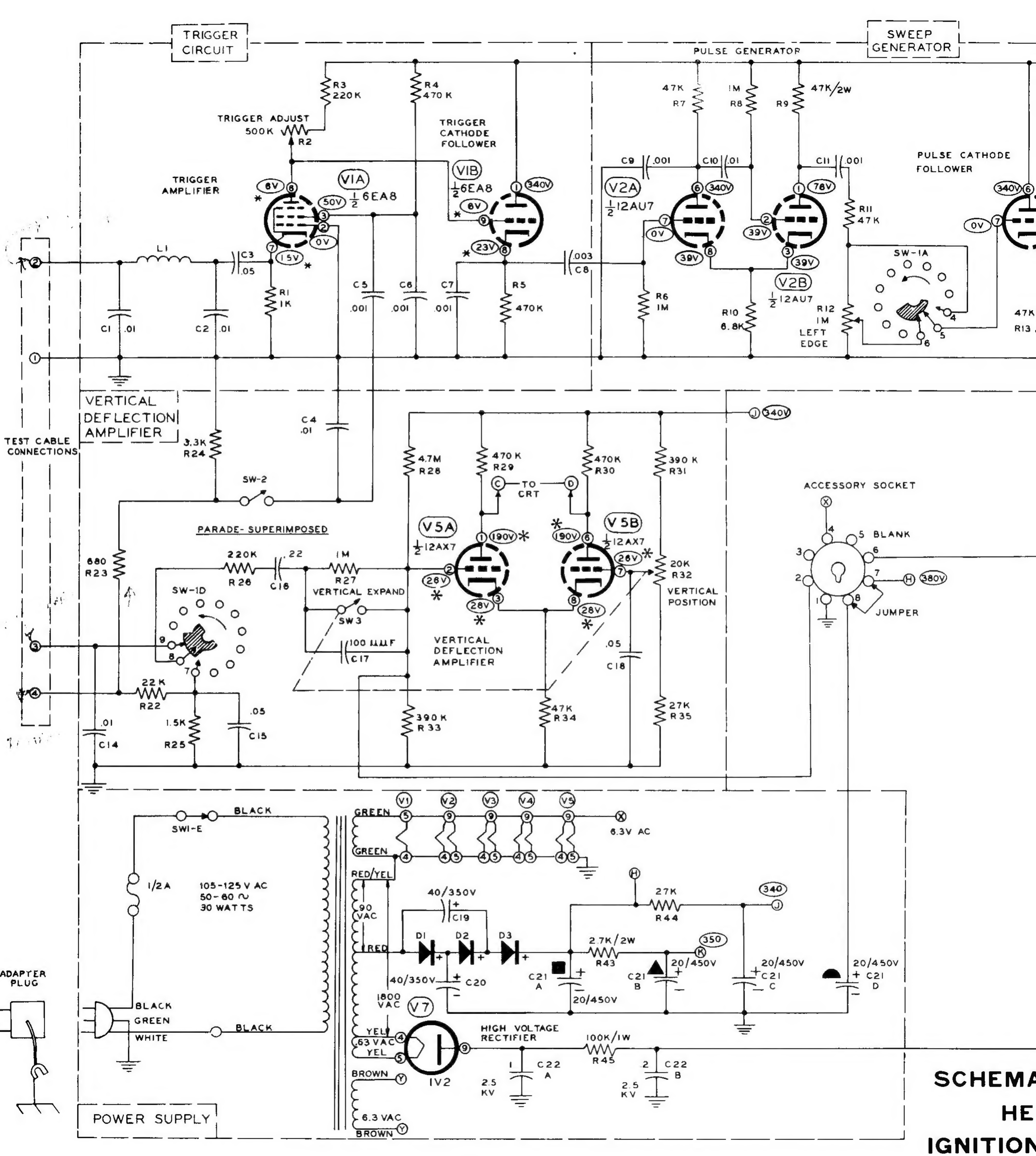

SCHEMA
HE
IGNITION
MOD

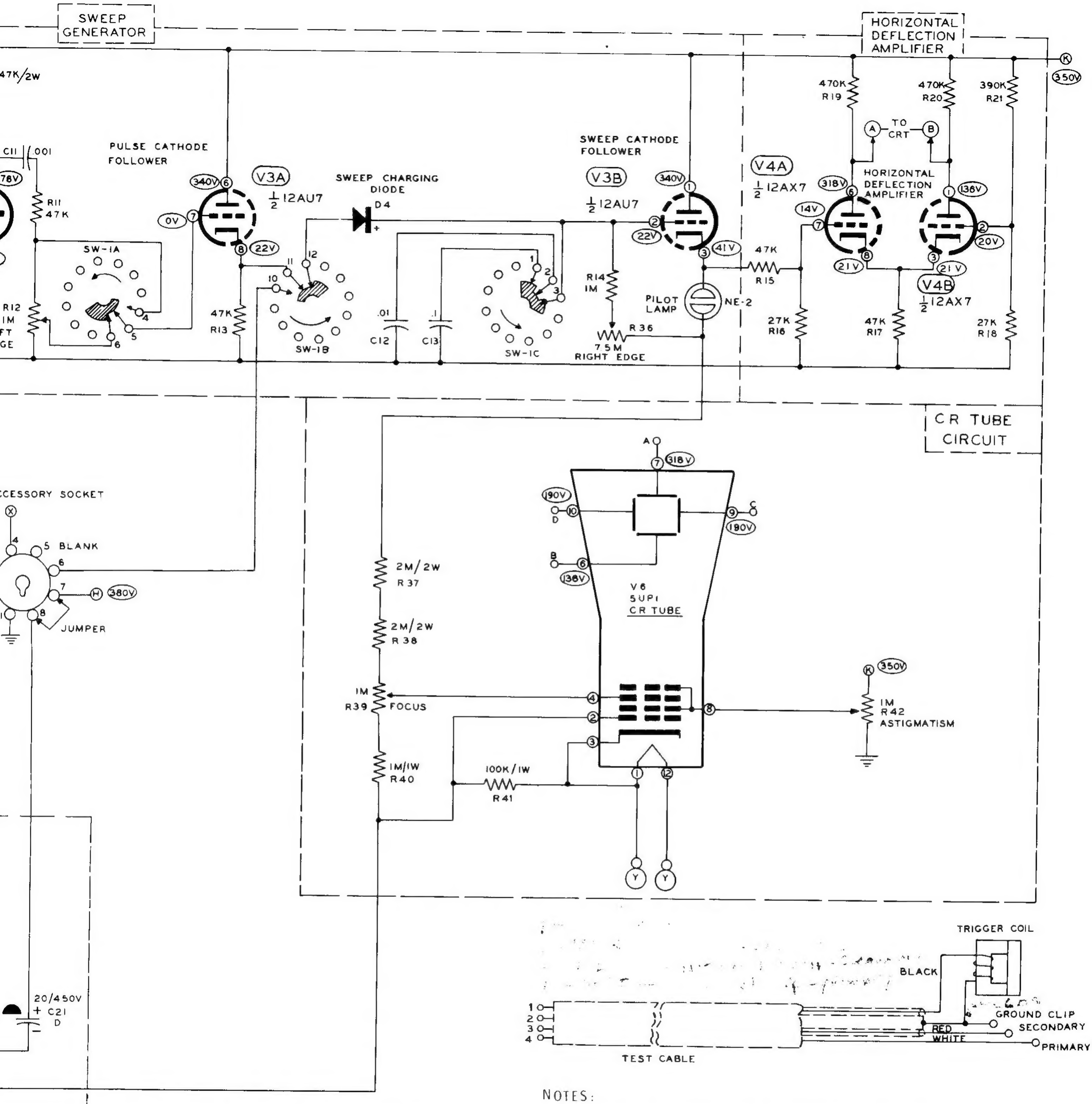

SCHEMATIC OF THE HEATHKIT® IGNITION ANALYZER MODEL IO-20

NOTES:

SELECTOR SWITCH SW-1 SHOWN IN SECONDARY NORMAL POSITION.

SUPERIMPOSED-PARADE SWITCH SW-2 SHOWN IN PARADE POSITION.

VERTICAL EXPAND SWITCH SW-3 SHOWN IN NORMAL POSITION.

VOLTAGES SHOWN ARE MEASURED WITH VTVM, 11 MEGOHM RESISTANCE.

ALL RESISTORS ARE MARKED IN OHMS AND ARE 1/2 WATT UNLESS OTHERWISE SPECIFIED.

ALL CAPACITORS ARE MARKED IN µFD UNLESS OTHERWISE SPECIFIED.

MULTIPLIERS: K 1000 M 1,000,000

* VOLTAGE VARIES WITH CONTROL SETTINGS.